Basics of Information theory

Pragya Goyal
National Institute of Science Education and Research
Supervisor: Dr. Anamay Tengse,
School of Computer Sciences,
National Institute of Science Education and Research

August 9, 2025

Contents

1. **Introduction** **1**
2. **Mathematical Foundation of Probability Space** **1**
   - 2.1 Random Experiments and Sample Spaces
   - 2.2 Events and Algebra of Sets
   - 2.3 Measure Spaces and Measure Functions
   - 2.4 Borel Sets and Lebesgue Measure
   - 2.5 Random Variables and their Probability Law
   - 2.6 Joint Density Function
   - 2.7 Expectation of a Random Variable
3. **Basics of Information Theory** **16**
   - 3.1 Entropy (bits)
   - 3.2 Joint Entropy
   - 3.3 Conditional Entropy
   - 3.4 Mutual Information
   - 3.5 Cross-Entropy
   - 3.6 Encoding in Information Theory
     - Shannon–Fano Encoding
     - Huffman Encoding
4. **Conclusion** **27**

1 Introduction

Information theory is a branch of mathematics that deals with the concept of quantification, storage, and communication of information. It has a diverse range of applications in computer science, communication engineering, and physics. Information theory was notably developed (formalized) by Claude Shannon in the 1940s through the early contributions of Harry Nyquist and Ralph Hartley around the 1920s. In this report, we will first develop the fundamentals of information theory by mathematically studying probability theory and then move further to the topics of information theory.

2 Mathematical foundation of Probability Theory

In order to build an understanding of information theory, it is important to understand the mathematical concepts on which it rests. **probability theory** - a field associated with quantifying randomness and defining the likelihood of various outcomes in a given system.

This section includes formal definitions of random experiment, outcomes, sigma-algebras, and Measure. These tools are necessary to analyze information and uncertainty in a mathematical way.[3]

2.1 Random experiments and Sample spaces

Definition — Random experiment

A random experiment is a process that leads to one of several possible outcomes, where the exact outcome cannot be predicted with certainty beforehand.

Random experiments are often performed repeatedly so that the collective results can be statistically analyzed. Each result of any fixed number of repetitions of the same **random experiment** is called a **trial**. For example, if one were to toss the same coin one hundred times and record each result, each toss would be considered a trial within the experiment composed of all the hundred tosses.

Definition — Sample space

The **sample space** is the set of all possible outcomes of the random experiment and is usually denoted by Ω.

Discrete sample spaces and Continuous sample spaces

Discrete sample spaces

A **discrete sample space** consists of a finite or countably infinite number of possible outcomes. Each outcome in a discrete sample space can be listed or enumerated. Examples of discrete sample spaces include:

- A toss of a coin until the heads appear for the first time: $\Omega = \{H, TH, TTH, TTTH, ...\}$.
- A roll of two dies: $\Omega = \{(i, j) : 1 \leq i \leq 6, 1 \leq j \leq 6\}$.

Continuous sample spaces

A **continuous sample space** consists of an uncountably infinite number of possible outcomes. These outcomes cannot be listed individually and are typically represented by intervals on the real number line. Examples of continuous sample spaces include the following.

- **Infinite uncountable sample space**: The exact point where a dart lands on a square target, where the sample space is the set of all points in the square: $\Omega = \{(a, b) : a \in \mathbb{R}, b \in \mathbb{R}\}$.

2.2 Events and Algebra of sets

Now that we have understood the basic terms, we can define more concepts in probability theory, including events.

Definition — Events

An **event** is a property that can be observed to either hold or not hold after the experiment is performed. Mathematically, an event is a subset of Ω that is of interest.

For example:

- Getting at least one heads on tossing two unbiased coins: $A = \{HH, HT, TH\}$ is an event.
- Getting exactly one heads on tossing two unbiased coins: $B = \{HT, TH\}$ is an event.

Note that if A and B are two different events then $A \cup B$, $A \cap B$, $\bar{A}$ and $\bar{B}$ all are also events **(where $\bar{A}$ is defined as elements of Ω that are NOT in A)**.

Definition — Algebra of set

A collection $\mathcal{F}_o$ of subsets of Ω is called an **algebra** if,

1. $\emptyset \in \mathcal{F}_o$.
2. If $A \in \mathcal{F}_o$ then $\bar{A} \in \mathcal{F}_o$.
3. If A, $B \in \mathcal{F}_o$ then $A \cup B \in \mathcal{F}_o$.

Clearly $\mathcal{F}_o$ is a set of subsets (**NOT** necessarily all) of Ω . For example for any subset A of Ω the set $S := \{\emptyset, A, \bar{A}, \Omega\}$ is an **algebra set**.
Also, it is easy to notice that all the elements of $\mathcal{F}_o$ are **events**. Now this definition of algebra is quite good, but we will be going to use a stronger type of sets known as σ **- algebra**. In mathematical analysis and probability theory, a σ-algebra ("sigma algebra") is part of the formalism for defining sets that can be **measured**. In **calculus** and **analysis**, for example, σ-algebras are used to define the concept of sets with area or volume.

Definition — σ-algebra (Sigma algebra) of set

A collection $\mathcal{F}$ of subsets of Ω is called an **sigma algebra** if,

1. $\emptyset \in \mathcal{F}$.
2. If $A \in \mathcal{F}$ then $\bar{A} \in \mathcal{F}$.
3. If A , $B \in \mathcal{F}$ then $A \cup B \in \mathcal{F}$ also $\forall i \in \mathbb{N}$, If $A_i \in \mathcal{F}$ then $\cup_{i=1}^{\infty} A_i \in \mathcal{F}$.

Note that the key difference between **algebra set** and **σ-algebra set** is that σ-algebra contains the property that it is **closed** under **countable unions (Or intersections)** and **NO** such condition is defined for algebra set.

For example:

Consider $\Omega = (0, 1]$ and let $\mathcal{F}_o$ be the set of all subsets of Ω of the form $(a, b]$ where $0 \leq a < b \leq 1$ and is closed under finite unions of disjoint interval of the same form.
Typical element:

$$(a_1, b_1] \cup (a_2, b_2] .... \cup (a_n, b_n]$$

where

$$0 \leq a_1 < b_1 \leq a_2 < b_2 .... \leq a_n < b_n \leq 1, n \in \mathbb{N}$$

This set $\mathcal{F}_o$ is an algebra but **NOT** a sigma-algebra.
Because $\cup_{n \in \mathbb{N}} (0, \frac{n}{n+1}] = (0, 1)$ which is not an element of $\mathcal{F}_o$ which means it is **NOT closed under countable unions**, hence it is **NOT** a sigma algebra.

2.3 Measure and Measurable spaces

Elements of sigma algebra (events) are also called $\mathcal{F}$ measurable and $(\Omega, \mathcal{F})$ is called **measurable space**. Now, to quantify measurable space, we have to define a function known as **measure**.

Definition — Measure

A measure is a function $\mu : \mathcal{F} \to [0, \infty]$ such that,

1. $\mu(\emptyset) = 0$
2. If $A_1, A_2, A_3, ...$ are countable collection of disjoint $\mathcal{F}$ measurable sets then

$$\mu(\cup_{i \in \mathbb{N}} A_i) = \sum_{i \in \mathbb{N}} \mu(A_i)$$

Now $(\Omega, \mathcal{F}, \mu)$ is called a **measure space**.

Furthermore, based on the value of μ on the measure space $(\Omega, \mathcal{F}, \mu)$ at Ω, the measure is distinguished into three parts.

- If $\mu(\Omega) < \infty$ then μ is called **finite measure**.
- If $\mu(\Omega) = \infty$ then μ is called **infinite measure**.
- If $\mu(\Omega) = 1$ then μ is called **probability measure** (In this case μ is generally replaced by $\mathbb{P}$). Giving our **probability measure space** (or just **probability space**) as $(\Omega, \mathcal{F}, \mathbb{P})$.

So, based on the above notations and conditions, we can define our **probability measure** as:

Definition — Probability measure

A probability measure is a function $\mathbb{P} : \mathcal{F} \to [0, 1]$ such that,

1. $\mathbb{P}(\emptyset) = 0$
2. $\mathbb{P}(\Omega) = 1$
3. If $A_1, A_2, A_3, ...$ is a countable collection of disjoint $\mathcal{F}$ measurable sets then

$$\mathbb{P}(\cup_{i \in \mathbb{N}} A_i) = \sum_{i \in \mathbb{N}} \mathbb{P}(A_i)$$

again here $(\Omega, \mathcal{F}, \mathbb{P})$ is called a **probability space**.

Definitions —

1. Two events E and F are called **independent** iff

$$\mathbb{P}(E \cap F) = \mathbb{P}(E).\mathbb{P}(F)$$

2. The conditional probability that event E occurs given that event F occurs is

$$\mathbb{P}(E|F) = \frac{\mathbb{P}(E \cap F)}{\mathbb{P}(F)}$$

Discrete probability space

Probability space defined on Countable sample space is called discrete probability space. In this case we can define our $\mathcal{F} = 2^{\Omega}$. The probability of each $A \in \mathcal{F}$ (or $A \subseteq \Omega$) is defined as,

$$\mathbb{P}(A) = \mathbb{P}(\cup_{\omega \in A}\{\omega\}) = \sum_{\omega \in A} \mathbb{P}(\{\omega\})$$

Also note that,

$$\Omega = \cup_{\omega \in \Omega}\{\omega\}$$

hence,

$$\mathbb{P}(\cup_{\omega \in \Omega}\{\omega\}) = \sum_{\omega \in \Omega} \mathbb{P}(\{\omega\})$$

We know by definiton $\mathbb{P}(\Omega) = 1$ hence $\sum_{\omega \in \Omega} \mathbb{P}(\{\omega\}) = 1$ which means **sum of probabilities of all element of** Ω is 1.

Continuous probability space

Probability space defined on an uncountable sample space is called a continuous probability space. It is a bit tedious task to define a measure on these probability spaces. What will be the sigma-algebra for the continuous sample spaces like $\Omega = [0, 1]$, and also then have to define a measure on Ω to get a measurable space. Lets first just look for the properties of measure μ on subsets of $\Omega = [0, 1]$,

- For $0 \leq a < b \leq 1$, $\mu((a, b)) = \mu((a, b]) = \mu([a, b)) = \mu([a, b])$ ..... (i)
- For $A \subseteq \Omega$, $\mu(A) = \mu(A \oplus x)$ where x is a real number added to all elements in A such that $A \oplus x \subseteq \Omega$ ..... (ii)

So for $\Omega = [0, 1]$ we now have to identify a measure μ defined on a certain σ-algebra $\mathcal{F}$ such that μ satisfies properties (i) and (ii) mentioned above.

Theorem — Impossibility theorem

There does **NOT** exist a measure μ defined on $\mathcal{F}$ which is 2^{Ω} i.e. collection of all subsets of $\Omega = [0, 1]$ satisfying (i) and (ii).

Note that as collection of all subsets of $\Omega = [0,1]$ cannot be consider as sigma algebra, so first we have to construct a sigma algebra on Ω. Define $\mathcal{E}$ which is a collection of **some subsets** of Ω.

Theorem —

There exists a unique sigma-algebra say $\sigma(\mathcal{E})$ which is a smallest σ-algebra containing all elements of $\mathcal{E}$. That is if $\mathcal{H}$ is any sigma-algebra containing $\mathcal{E}$ then $\sigma(\mathcal{E}) \subseteq \mathcal{H}$.

2.4 Borel sets and Lebesgue measure

Now let's assume that Ω be $(0,1]$ and $\mathcal{E}$ be collection of all open intervals in Ω then the smallest sigma-algebra containing $\mathcal{E}$ which is denoted by $\sigma(\mathcal{E})$ is known as **Borel σ-algebra** $\mathcal{B}((0,1])$. The elements of $\mathcal{B}$ sigma-algebra are called **Borel measurable** or **Borel set**.
Let $b \in (0,1]$, then the singleton $\{b\}$ is a Borel set because it can be written as a countable intersection of Borel sets B_n defined as,

$$B_n = \left(b - \frac{1}{n}, b + \frac{1}{n}\right)$$

writing b in their countable intersections,

$$\{b\} = \bigcap_{n \in \mathbb{N}} \left[\left(b - \frac{1}{n}, b + \frac{1}{n}\right) \cap \Omega\right]$$

Hence, we can say, $(a,b), (a,b], [a,b), [a,b]$ all belong to $\mathcal{B}((0,1])$.
To understand Lebesgue measure we should first define its sigma algebra. Consider $\Omega = (0,1]$ and $\mathcal{F}_o$ is the set of all subsets of Ω of the form $(a,b]$ where $0 \leq a < b \leq 1$ and is closed under finite unions of disjoint intervals of the same form.
Typical element:

$$(a_1, b_1] \cup (a_2, b_2] .... \cup (a_n, b_n] \text{ ..... (iii)}$$

where

$$0 \leq a_1 < b_1 \leq a_2 < b_2 .... \leq a_n < b_n \leq 1, n \in \mathbb{N}$$

We already know that this set $\mathcal{F}_o$ is an algebra but **NOT** a sigma-algebra proved above. It is easy to notice that smallest sigma-algebra containing $\mathcal{F}_o \to \sigma(\mathcal{F}_o)$ is equal to $\mathcal{B}((0,1])$.

Lebesgue measure on $(0,1]$

If $F = (a_1, b_1] \cup (a_2, b_2] .... \cup (a_n, b_n]$ we want a probability measure $\mathbb{P}(F) = \sum_i^n (b_i - a_i)$ but we want this to happen to all countable unions of disjoint set $(a,b]$ in $\sigma(\mathcal{F}_o)$ which is done by **Caratheodary's extension theorem**.

Theorem — Caratheodary's extension theorem

Let $\mathcal{F}_o$ be an algebra on Ω and let $\mathcal{F} = \sigma(\mathcal{F}_o)$, suppose $\mathbb{P}_o : \mathcal{F}_o \to [0,1] \ni \mathbb{P}_o(\Omega) = 1$ and $\mathbb{P}_o$ is countably additive on $\mathcal{F}_o$, then $\mathbb{P}_o$ can be **uniquely** extended to a probability measure $\mathbb{P}$ on $(\Omega, \mathcal{F})$. That is there exists a unique probability measure $\mathbb{P}$ on $(\Omega, \mathcal{F}) \ni \mathbb{P}(A) = \mathbb{P}_o(A),\ \forall A \in \mathcal{F}_o$

We already have a $\mathcal{F}_o$ defined earlier in (iii), which is an algebra, and it is also known that $\sigma(\mathcal{F}_o) = \mathcal{B}((0,1])$.
Define : $\mathbb{P}_o \to [0,1] \ni \mathbb{P}_o(\emptyset) = 0$ and for $F \in \mathcal{F}_o$,

$$F = (a_1, b_1] \cup (a_2, b_2] .... \cup (a_n, b_n],\ \mathbb{P}(F) = \sum_i^n (b_i - a_i)$$

By **Caratheodary theorem**, $\exists!$ $\mathbb{P}$ on $(\Omega, \mathcal{B}(0,1])$ which agrees with $\mathbb{P}_o$ on $\mathcal{F}_o$. **Here $\mathbb{P}$ is called a Lebesgue measure on $\mathcal{B}$** making our measure space for continuous sample space $\Omega = (0,1]$ as $(\Omega, \mathcal{B}, \mathbb{P})$.

Question: What is the probability that a dart thrown at the real number line from (0,1] will land on a singleton element?
Solution:
We know that any singleton $\{b\} \in \mathcal{B}((0,1])$ so its probability can be calculated as,

$$\mathbb{P}(\{b\}) = \mathbb{P}\left(\bigcap_{n \in \mathbb{N}} \left[(b - \frac{1}{n}, b + \frac{1}{n}\right] \cap \Omega\right)$$

Which can further be simplified as,

$$\lim_{x \to \infty} \mathbb{P}\left(\left(b - \frac{1}{n}, b + \frac{1}{n}\right) \cap \Omega\right) = \lim_{x \to \infty} \frac{2}{n} = 0$$

Hence probability that a dart thrown at the real number line from (0,1] will land on a singleton element is exactly zero!. A countable set will always have a **zero Lebesgue measure**.

This idea of Probability measure is only done on sample space $\Omega = (0,1]$ which can be extended to real number $\mathbb{R}$ similarly.

2.5 Random variables and their Probability law

Definition — Random variable

Let $(\Omega, \mathcal{F}, \mathbb{P})$ be a probability space and $(\mathbb{R}, \mathcal{B}(\mathbb{R}))$ be a measurable space of real numbers with Borel σ-algebra.
Then a function,

$$X : \Omega \to \mathbb{R}$$

is called a random variable if:

$$\forall\ B \in \mathcal{B}(\mathbb{R}),\ X^{-1}(B) \in \mathcal{F}.$$

Means a random variable is a **measurable function** from the sample space Ω to the real numbers $\mathbb{R}$, where the pre-image of every Borel set is an event (or $\mathcal{F}$ measurable).

For example:

Let us consider the experiment of tossing a fair coin twice. We define the following components:

- **Sample space:**
$$\Omega = \{HH, HT, TH, TT\}$$

- **Sigma-algebra:**
Since the sample space is finite, we consider the power set as the sigma-algebra:
$$\mathcal{F} = 2^{\Omega}$$
which includes all subsets of Ω.

- **Random variable:**
Define a function $X : \Omega \to \mathbb{R}$ by
$$X(\omega) = \text{number of heads in the outcome } \omega$$
Thus, the mapping is:
$$\begin{aligned} X(HH) &= 2 \\ X(HT) &= 1 \\ X(TH) &= 1 \\ X(TT) &= 0 \end{aligned}$$

To verify that X is a random variable, we check that for every Borel set $B \in \mathcal{B}(\mathbb{R})$, the pre-image $X^{-1}(B) \in \mathcal{F}$. For example:

- $B = \{1\} \Rightarrow X^{-1}(B) = \{HT, TH\} \in \mathcal{F}$
- $B = (-\infty, 2] \Rightarrow X^{-1}(B) = \{HH, HT, TH, TT\} = \Omega \in \mathcal{F}$
- $B = \{x \in \mathbb{R} : x > 0\} \Rightarrow X^{-1}(B) = \{HH, HT, TH\} \in \mathcal{F}$
- $B = \{3\} \Rightarrow X^{-1}(B) = \emptyset \in \mathcal{F}$

Hence, since $X^{-1}(B) \in \mathcal{F}$ for all Borel sets B, the function X is a measurable function. Therefore, X is a valid **random variable**.

Probability law of random variables

Definition — Probability law of random variable

Let $X : \Omega \to \mathbb{R}$ be a random variable defined on a probability space $(\Omega, \mathcal{F}, \mathbb{P})$. The **probability law** (also called the *distribution* or *pushforward measure*) of X, denoted by $\mathbb{P}_X$, is a measure on the Borel σ-algebra $\mathcal{B}(\mathbb{R})$, defined as follows:

$$\mathbb{P}_X(B) = \mathbb{P}(X^{-1}(B)) = \mathbb{P}(\{\omega \in \Omega \mid X(\omega) \in B\} \quad \text{for all } B \in \mathcal{B}(\mathbb{R})$$

In other words, the probability law assigns to each Borel set $B \subseteq \mathbb{R}$ the probability that the random variable X takes a value in B.

For example:

In the follow up from the previous example only Since X takes only the values $0, 1, 2$, we compute:

$$P_X(\{0\}) = P(X^{-1}(\{0\})) = P(\{TT\}) = \frac{1}{4}$$
$$P_X(\{1\}) = P(X^{-1}(\{1\})) = P(\{HT, TH\}) = \frac{1}{2}$$
$$P_X(\{2\}) = P(X^{-1}(\{2\})) = P(\{HH\}) = \frac{1}{4}$$

Thus, the probability law of X is given by:

$$P_X(x) = \begin{cases} \frac{1}{4}, & x = 0 \\ \frac{1}{2}, & x = 1 \\ \frac{1}{4}, & x = 2 \\ 0, & \text{otherwise} \end{cases}$$

This defines a **discrete probability distribution** on $\mathbb{R}$.
The probability law of random variables is essential because it provides a mathematical

framework to describe, analyze, and make predictions about random phenomena. In essence, it's the foundation that allows us to model uncertainty, quantify risks, and draw meaningful conclusions from random processes. In short, without the probability law, it would be much harder to predict, analyze, and make informed decisions in a world full of randomness and uncertainty.

Note: $(\mathbb{R}, \mathcal{B}(R), \mathbb{P}_X)$ is a **probability space**

Definition — Cumulative distribution function

Let X be a real-valued random variable defined on a probability space $(\Omega, \mathcal{F}, \mathbb{P})$. The **cumulative distribution function (CDF)** of X, denoted by F_X, is the function $F_X : \mathbb{R} \to [0, 1]$ defined by:

$$F_X(x) = \mathbb{P}(X \leq x) = \mathbb{P}(\{\omega \in \Omega \mid X(\omega) \leq x\}$$

for every $x \in \mathbb{R}$.

Properties of CDF:

- F_X is a non-decreasing function: for all $x_1 < x_2$, we have $F_X(x_1) \leq F_X(x_2)$.
- $\lim_{x \to -\infty} F_X(x) = 0$ and $\lim_{x \to +\infty} F_X(x) = 1$.
- F_X is right-continuous: for every $x \in \mathbb{R}$,

$$\lim_{h \downarrow 0} F_X(x + h) = F_X(x).$$

- For any $a < b$, the probability that $X \in (a, b]$ is given by

$$\mathbb{P}(a < X \leq b) = F_X(b) - F_X(a).$$

Types of random variables

There are **mainly** two types of random variables, which are discrete random variable and continuous random variable.

- **Discrete random variable:** A discrete random variable is a random variable that takes on at most countably many distinct values. These values can often be listed. Formally, a random variable $X : \Omega \to \mathbb{R}$ is discrete if there exists a countable set $\{x_1, x_2, \ldots\} \subset \mathbb{R}$ such that:

$$\mathbb{P}(X \in \{x_1, x_2, \ldots\}) = 1.$$

  That is, the entire probability mass is concentrated on a countable set.

  The **probability mass function (PMF)** $p(x) = \mathbb{P}(X = x)$ fully describes the distribution of a discrete random variable.

- **Continuous random variable:** A continuous random variable is a random variable whose distribution is absolutely continuous with respect to some Lebesgue measure, say λ on $\mathbb{R}$. This means that there exists a **probability density function (PDF)** $f(x)$ such that for any Borel set $B \subseteq \mathbb{R}$,

$$\mathbb{P}(X \in B) = \int_B f(x)\,dx.$$

  In particular, for any $a < b$,

$$\mathbb{P}(a \leq X \leq b) = \int_a^b f(x)\,dx.$$

  Also, for a continuous random variable, $\mathbb{P}(X = x) = 0$ for all $x \in \mathbb{R}$ because $\lambda(x) = 0$ for all $x \in \mathbb{R}$.

Note that for a continuous random variable having a density function $f(x)$,

$$\int_{\mathbb{R}} f(x)\,dx = 1$$

2.6 Joint density function

Definition — Joint density function

Let $(\Omega, \mathcal{F}, \mathbb{P})$ be a probability space and let $(X, Y) : \Omega \to \mathbb{R}^2$ be a pair of real-valued random variables. We say that (X, Y) is **absolutely continuous** if there exists a non-negative integrable function $f_{X,Y} : \mathbb{R}^2 \to [0, \infty)$ such that for all Borel sets $A \subseteq \mathbb{R}^2$,

$$\mathbb{P}((X, Y) \in A) = \iint_A f_{X,Y}(x, y)\,dx\,dy.$$

The function $f_{X,Y}(x, y)$ is called the **Joint probability density function** (joint pdf) of X and Y.
This function must satisfy:

1. $f_{X,Y}(x, y) \geq 0$ for all $(x, y) \in \mathbb{R}^2$
2. $\iint_{\mathbb{R}^2} f_{X,Y}(x, y)\,dx\,dy = 1$

Example. Let the joint density function of random variables X and Y be given by

$$f_{X,Y}(x, y) = \begin{cases} 4xy^2 & \text{if } 0 \leq x \leq 1, -1 \leq y \leq 0, \\ 0 & \text{otherwise.} \end{cases}$$

We verify it is a valid joint density function by checking that it integrates to 1:

$$\int_0^1 \int_{-1}^0 4xy^2 \, dy \, dx = \int_0^1 4x \left[\int_{-1}^0 y^2 \, dy \right] dx = \int_0^1 4x \left[\frac{y^3}{3} \Big|_{-1}^0 \right] dx$$
$$= \int_0^1 4x \cdot \frac{1}{3} \, dx = \frac{4}{3} \cdot \frac{x^2}{2} \Big|_0^1 = \frac{4}{3} \cdot \frac{1}{2} = \frac{2}{3}.$$

Since this integrates to $\frac{2}{3} < 1$, this function is **not** a valid joint density function. To make it valid, we normalize it: Define

$$f_{X,Y}(x,y) = \begin{cases} 6xy^2 & \text{if } 0 \le x \le 1, -1 \le y \le 0, \\ 0 & \text{otherwise,} \end{cases}$$

Then:

$$\int_0^1 \int_{-1}^0 6xy^2 \, dy \, dx = \int_0^1 6x \left[\int_{-1}^0 y^2 \, dy \right] dx = \int_0^1 6x \cdot \frac{1}{3} \, dx = 2 \cdot \frac{1}{2} = 1.$$

So this is a valid joint density function.

Marginal densities and Independence of random variables

Given joint density function:

$$f_{X,Y}(x,y) = \begin{cases} 6xy^2 & \text{if } 0 \le x \le 1, \ -1 \le y \le 0, \\ 0 & \text{otherwise} \end{cases}$$

1. Marginal Density of X

$$f_X(x) = \int_{-1}^0 f_{X,Y}(x,y) \, dy = \int_{-1}^0 6xy^2 \, dy$$

$$= 6x \int_{-1}^0 y^2 \, dy = 6x \left[\frac{y^3}{3} \right]_{-1}^0 = 6x \left(0 - \left(-\frac{1}{3} \right) \right) = 6x \cdot \frac{1}{3} = 2x$$

$$\therefore \quad f_X(x) = \begin{cases} 2x & \text{if } 0 \le x \le 1, \\ 0 & \text{otherwise} \end{cases}$$

2. Marginal Density of Y

$$f_Y(y) = \int_0^1 f_{X,Y}(x,y) \, dx = \int_0^1 6xy^2 \, dx$$

$$= 6y^2 \int_0^1 x \, dx = 6y^2 \left[\frac{x^2}{2} \right]_0^1 = 6y^2 \cdot \frac{1}{2} = 3y^2$$

$$\therefore \quad f_Y(y) = \begin{cases} 3y^2 & \text{if } -1 \le y \le 0, \\ 0 & \text{otherwise} \end{cases}$$

Definition — Independence of random variable

- Discrete random variable: As we know that probability mass function $p(x) = \mathbb{P}(X = x)$ fully describes the distribution of discrete random variable, we can say that two random variable X and Y are said to be independent if,

$$\mathbb{P}(X = x,\, Y = y) = \mathbb{P}(X = x) \cdot \mathbb{P}(Y = y)\, \forall\, x, y \in \mathbb{R}$$

- Continuous random variable: In case of continuous random variable, we can use the probability density function to describe their independence and say that two random variables X and Y are said to be independent if,

$$f_{X,Y}(x, y) = f_X(x) \cdot f_Y(y)\, \forall\, x, y \in \mathbb{R}$$

Note that if two random variables are jointly absolute continuous then both individually are absolute continuous too, because we can get their individual densities from the joint densities as follow [1]:

$$f_X(x) = \int_{-\infty}^{+\infty} f_{X,Y}(x, y)\, dy$$
$$f_Y(x) = \int_{-\infty}^{+\infty} f_{X,Y}(x, y)\, dx$$

2.7 Expectation of a random variable

In general, expectation of a random variable is described using Lebesgue integration on a probability space, which is a part of a **measure theory**. In this section, we are going to look for the definition of expectation without going into the depth of measure theory.
Let $(\Omega, \mathcal{F}, \mathbb{P})$ be a probability space, and let $X : \Omega \to \mathbb{R}$ be a real-valued random variable. Since X **is measurable**, it is integrable in the Lebesgue sense whenever the integral of its absolute value is finite, i.e., $\int_\Omega |X|\, d\mathbb{P} < \infty$. In this context, the expectation of X is defined as the Lebesgue integral of X with respect to the probability measure $\mathbb{P}$ as,

$$\mathbb{E}[X] = \int_\Omega X\, d\mathbb{P}.$$

In general, we can understand the expectation of a random variable $E[X]$ to be the weighted sum (or integral) of the values of that random variable over the sample space Ω.
In case of discrete random variable we can directly express it as a weighted sum of the probability mass function as,

$$\mathbb{E}[X] = \sum_{x \in \Omega} x\, \mathbb{P}(X = x)$$

and in case of continuous random variable we can express it in the form of a probabilty density function as,

$$\mathbb{E}[X] = \int_{\mathbb{R}} x\, f_X(x)\, dx$$

Theorem — Linearity of expectation

Let $X_1, X_2, \ldots, X_n$ be random variables defined on the same probability space, and let $a_1, a_2, \ldots, a_n$ be real constants. Then, the expectation operator $\mathbb{E}$ is linear, i.e.,

$$\mathbb{E}\left[\sum_{i=1}^{n} a_i X_i\right] = \sum_{i=1}^{n} a_i \mathbb{E}[X_i].$$

This property holds **regardless of whether the random variables are dependent or independent**.

Coupon collector's problem[2]

In probability theory, the coupon collector problem is a mathematical problem of collecting coupons from a box. The problem states that Suppose there are n different types of coupons in a box, and each time you draw a coupon, it is equally likely to be any one of the n types (with replacement). What is the expected number of draws one must do to have at least one of each type?

Solution:

Let X be the total number of trials needed to collect all n distinct coupons. We define X as the sum of n random variables:

$$X = X_1 + X_2 + \cdots + X_n$$

where X_i is the number of additional trials required to collect the ith new coupon, given that we have already collected $(i-1)$ distinct coupons.

Let us compute $\mathbb{E}[X_i]$ using the definition of expectation:

$$\mathbb{E}[X_i] = \sum_{p=1}^{\infty} p \cdot \Pr(X_i = p)$$

Given that we already have $(i-1)$ unique coupons, the probability of drawing a *new* coupon is:

$$p = \frac{n-i+1}{n}, \quad \text{and the probability of a repeat coupon is } q = \frac{i-1}{n}$$

To get the ith new coupon on the pth trial, the first $(p-1)$ draws must be repeats, and the pth must be new. Hence,

$$\Pr(X_i = p) = q^{p-1} \cdot p = \left(\frac{i-1}{n}\right)^{p-1} \cdot \frac{n-i+1}{n}$$

So,

$$\mathbb{E}[X_i] = \sum_{p=1}^{\infty} p \left(\frac{i-1}{n}\right)^{p-1} \cdot \frac{n-i+1}{n}$$

Let $a = \frac{i-1}{n}$ and $1 - a = \frac{n-i+1}{n}$, so that:

$$\mathbb{E}[X_i] = (1-a)\sum_{p=1}^{\infty} pa^{p-1}$$

Changing the index $k = p - 1$ gives:

$$\mathbb{E}[X_i] = (1-a)\sum_{k=0}^{\infty}(k+1)a^k$$

We use the identity:

$$\sum_{k=0}^{\infty}(k+1)a^k = \frac{1}{(1-a)^2}, \quad \text{for } |a| < 1$$

Thus,

$$\mathbb{E}[X_i] = (1-a)\cdot\frac{1}{(1-a)^2} = \frac{1}{1-a}$$

Since $1 - a = \frac{n-i+1}{n}$, we finally obtain:

$$\mathbb{E}[X_i] = \frac{n}{n-i+1}$$

Therefore, the expected number of trials to collect all n coupons is:

$$\mathbb{E}[X] = \sum_{i=1}^{n}\mathbb{E}[X_i] = \sum_{i=1}^{n}\frac{n}{n-i+1}$$

Letting $k = n - i + 1$, we get:

$$\mathbb{E}[X] = n\sum_{k=1}^{n}\frac{1}{k} = nH_n$$

where H_n is the nth harmonic number.

Definition — Conditional expectation

Let Y and Z be discrete random variables. The conditional expectation of Y given $Z = z$ is defined as the weighted average of the values of Y, weighted by the conditional probabilities given $Z = z$:

$$\mathbb{E}[Y \mid Z = z] = \sum_y y \cdot \mathbb{P}(Y = y \mid Z = z)$$

This gives the expected value of Y under the condition that the random variable Z takes the value z.

Lemma: 1 For any random variable X and Y,

$$\mathbb{E}[X] = \sum_y \mathbb{P}(Y = y) \cdot \mathbb{E}[X \mid Y = y]$$

Lemma: 2 For any finite collection of discrete random variables $X_!, X_2, X_3, ...X_n$ with finite expectations, and for any random variable Y,

$$\mathbb{E}\left[\sum_{i=1}^{n} X_i \mid Y = y\right] = \sum_{i=1}^{n} \mathbb{E}[X_i \mid Y = y]$$

Proof of lemma: 1:
We know that $\mathbb{E}[X] = \sum_x x \cdot \mathbb{P}(X = x)$ and $\mathbb{P}(X = x) = \sum_y \mathbb{P}(X = x, Y = y)$.

$$\sum_y \mathbb{P}(X = x, Y = y) = \sum_y \mathbb{P}(X = x \mid Y = y) \cdot \mathbb{P}(Y = y)$$

hence,

$$\mathbb{E}[X] = \sum_x x \cdot \sum_y \mathbb{P}(X = x \mid Y = y) \cdot \mathbb{P}(Y = y)$$

$$\mathbb{E}[X] = \sum_y \mathbb{P}(Y = y) \sum_x x \cdot \mathbb{P}(X = x \mid Y = y)$$

$$\mathbb{E}[X] = \sum_y \mathbb{P}(Y = y) \cdot \mathbb{E}(X \mid Y = y)$$

Hence Proved.

3 Basics of Information theory

Information theory is a mathematical concept developed to describe the boundaries and principles of communication and data compression. It was founded by Claude Shannon in the late 1940s and gives mathematical tools to quantify the **amount of information** in a message, the uncertainty in a random event (**entropy**) etc. Through this, we get to know that **How much we can compress data without losing any information** and **How**

much information does one variable tell about another. This has its application in computer science, telecommunications, cryptography, machine learning, and more. In this section, I will define the fundamental concepts in Information theory, like Entropy, and further definitions related to that.

3.1 Entropy (bits)

In order to process (like storing and transferring) certain information, we need to know how to measure or quantify it. So, if one wants to create a metric to measure information, they should ask what might be the properties of this metric?

Properties of measure of information:

- One thing that Shannon realized after thinking about this problem is that **Information is somehow related to uncertainty**. For instance, saying"One will get 4 after rolling an unbiased die" has somewhat **MORE** information (or **Surprise!**) than saying "One will get 6 or a prime number after rolling the same die". This is just because finding out that we will get exactly 4 on the die is way more **Surprising** than getting 6 or prime. Hence, it can be concluded that **Information (let $I(x)$), which sometimes can also be considered as Surprise and probability (let $P(x)$) are inversely related**. This is one of four key axioms of Shannon's definition of Information.

- Observing an event, we know would never cause the loss of information. Hence **metric of information should always be greater than or equal to zero** i.e. $I(x) \geq 0$

- **If an event is universal truth then it contains NO valuable information**. If $P(x) = 1$ then $I(x) = 0$.

- **If two events are independent, their combined information is the sum of individual information**. If $P(x \cap y) = P(x) \cdot P(y)$ then $I(x \cap y) = I(x) + I(y)$.

It can be proven that only set of functions that satisfies these properties are of the form

$$I_b(x) = -log_b\, P(x) \text{.....Notice } P \to \mathbb{P}$$

where b is the unit we want the information in. This is the definition of the quantity that Shannon named **Self-information**. For the information to be measured in bits, we take $b = 2$; hence, $I_2(x)$ is called self-information (bits). For example, a coin landing on tails will have $I_2(Tails) = -log_2(1/2) = 1$ bit(s) of information, and an 8-faced unbiased die landing on 4 has $I_2(4) = -log_2(1/8) = 3$ bits of information. Means tossing a coin three times gives the same amount of information that we get on rolling an 8-faced die. Now, for a general probability distribution, Shannon defines a term called **Entropy**[4].

Definition — Entropy

Given discrete Random variable X with outcomes $x_1, x_2, ...x_n$ with probability $P(x_1), P(x_2), ...P(x_n)$ the entropy H of the random variable X is given by,

$$H(X) = -\sum_{i=1}^{n} P(x_i) \cdot log_2 P(x_i) = \sum_{i=1}^{n} P(x_i) \cdot I_2(x_i)$$

Higher Entropy implies a more random and unpredictable distribution model
For example: Let the probability that when a coin is tossed it lands on Heads be p. Then the entropy $H(p)$ of this probability distribution will be,

$$H(p) = (1-p) \cdot log\left(\frac{1}{1-p}\right) + p \cdot log\left(\frac{1}{p}\right)$$

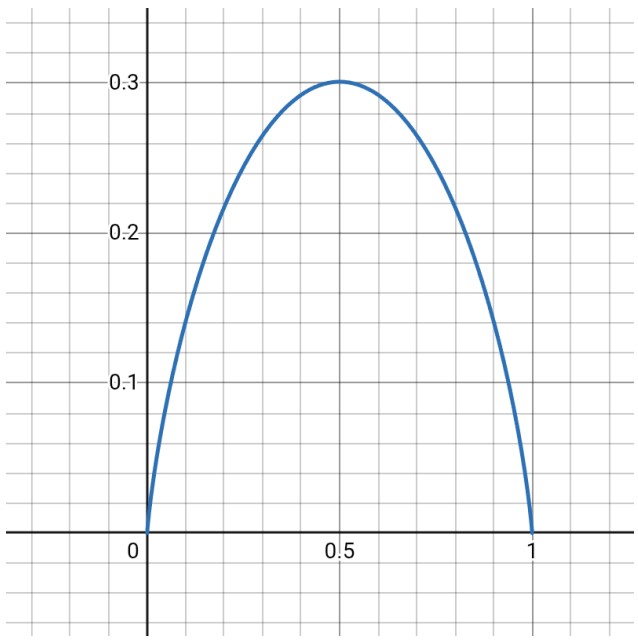

Figure 1: $H(p)$ vs p

Clearly, as we see in **Figure 1**, the entropy of the distribution is maximum when the distribution is most unpredictable i.e. when $p = 0.5$.

"*My greatest concern was what should I call it. I thought of calling it information, but the word is overly used so I decided it to call* ***uncertainty****, when I discussed it with John von Neumann, he had a better idea.*" ..... Claude Shannon

"*You should call it* ***Entropy*** *for two reasons. In the first place your uncertainty function is already been used in statistical mechanics under that name. In the second place, and importantly, no one knows what entropy really is, so in a debate you will always have an advantage.*" ..... John van Neumann

3.2 Joint entropy

Joint entropy is used to quantify the total amount of information in a pair of random variables. It helps in understanding how much uncertainty exists when both variables are considered together.

Definition — Joint entropy

Joint entropy, denoted by $H(X, Y)$, measures the total uncertainty or information content associated with two random variables X and Y taken together. It is defined as:

$$H(X, Y) = -\sum_x \sum_y P(x, y) \cdot log_2 P(x, y)$$

where $P(x, y)$ is the joint probability that $X = x$ and $Y = y$.

When the two random variable are **independent** then $H(X, Y) = H(X) + H(Y)$
Unlike the joint probability density function, we cannot get individual entropy from joint entropy, for this we need to have extra information like joint probability distribution, from this we can get the individual probability mass function, which can further be used to estimate individual entropy.

$$P(X = x) = \sum_y P(X = x, Y = y) \text{ and } P(Y = y) = \sum_x P(X = x, Y = y) \text{ then}$$

$$H(X) = -\sum_x P(X = x) \cdot log_2 P(X = x) \text{ and } H(Y) = -\sum_y P(Y = y) \cdot log_2 P(Y = y)$$

3.3 Conditional entropy

Conditional entropy tells us **how much entropy in a random variable remains** if we already learned about another random variable. There is a possibility that either we know about the fixed value of another random variable, or we can know about it as a whole.
Definition : The entropy of random variable X if given the that another random variable $Y = y$ $H(X \mid Y = y)$ is given by,

$$H(X \mid Y = y) = \sum_x P(X = x \mid Y = y) \cdot log_2 \left(\frac{1}{P(X = x \mid Y = y)} \right)$$

For Example : Suppose we have two binary random variables:

- $X \in \{0, 1\}$
- $Y \in \{A, B\}$

Conditional probabilities are given by:

$$P(X = 0 \mid Y = A) = 0.2, \quad P(X = 1 \mid Y = A) = 0.8$$
$$P(X = 0 \mid Y = B) = 0.5, \quad P(X = 1 \mid Y = B) = 0.5$$

Now compute:

$$H(X \mid Y = A) = -[0.2 \log_2 0.2 + 0.8 \log_2 0.8] \approx 0.7219$$

$$H(X \mid Y = B) = -[0.5 \log_2 0.5 + 0.5 \log_2 0.5] = 1$$

Interpretation: Knowing $Y = A$, X is more predictable. Knowing $Y = B$, X is maximally uncertain like a fair coin toss.

Definition — Conditional entropy $H(X \mid Y)$

The **conditional entropy** $H(X \mid Y)$ quantifies the amount of uncertainty remaining about the random variable X when the value of another random variable Y is known. It is defined as:

$$H(X \mid Y) = -\sum_x \sum_y P(X = x, Y = y) \cdot log_2 P(X = x \mid Y = y)$$

If $X = Y$ then $H(X \mid Y) = 0$

Understanding the definition

For each y of the random variable Y we can calculate $H(X \mid Y = y)$ with the certainty of $Y = y$ being $P(Y = y)$. So for all y of random variable Y if we calculate the weighted sum of $H(X \mid Y = y)$ we should get $H(X \mid Y)$.
Hence,

$$H(X \mid Y) = \sum_y P(Y = y) \cdot H(X \mid Y = y) \text{ substituting the value of } H(X \mid Y = y),$$
$$= -\sum_y P(Y = y) \cdot \sum_x P(X = x \mid Y = y) \cdot log_2 P(X = x \mid Y = y)$$

We know that $P(X = x \mid Y = y) = \frac{P(X=x,Y=y)}{P(Y=y)}$ after substituting we get,

$$H(X \mid Y) = -\sum_x \sum_y P(X = x, Y = y) \cdot log_2 P(X = x \mid Y = y)$$

Also, just like conditional probability, we can expand conditional entropy as,
$H(X \mid Y) = H(X, Y) - H(Y)$
Here is the formal proof, substitute the definitions of joint entropy and conditional entropy:

$$H(X, Y) = -\sum_{x,y} P(x, y) \log_2 P(x, y)$$
$$H(X \mid Y) = -\sum_{x,y} P(x, y) \log_2 P(x \mid y)$$

So,

$$\begin{aligned} H(Y) &= H(X, Y) - H(X \mid Y) \\ &= \left[-\sum_{x,y} P(x, y) \log_2 P(x, y)\right] - \left[-\sum_{x,y} P(x, y) \log_2 P(x \mid y)\right] \\ &= \sum_{x,y} P(x, y) \left[\log_2 P(x \mid y) - \log_2 P(x, y)\right] \end{aligned}$$

Recall that:

$$\log_2 P(x \mid y) - \log_2 P(x, y) = -\log_2 P(y)$$

Thus,

$$\begin{aligned} H(Y) &= \sum_{x,y} P(x, y) \left[-\log_2 P(y)\right] \\ &= -\sum_{x,y} P(x, y) \log_2 P(y) \text{.....(iv)} \end{aligned}$$

Since $\log_2 P(y)$ does not depend on x, we can factor it out:

$$\begin{aligned} H(Y) &= -\sum_{y} \left[\sum_{x} P(x, y)\right] \log_2 P(y) \\ &= -\sum_{y} P(y) \log_2 P(y) \end{aligned}$$

Which is the definition of entropy of Y:

$$H(Y) = -\sum_{y} P(y) \log_2 P(y)$$

3.4 Mutual information

Mutual information refers to the amount of information that the two random variables share. It is defined as a **reduction** in the uncertainty of one random variable given knowledge of another. It is closely related to Entropy as well.

Key properties of mutual information :

- Mutual information is symmetric in nature, meaning for any two random variables X and Y, $I(X;Y) = I(Y;X)$.
- If these two random variables are independent, then their mutual information is zero, $I(X;Y) = 0$.
- If these two random variables are not independent of each other, then the joint entropy of the two random variables $H(X,Y) = H(X) + H(Y) - I(X;Y)$.
- As $I(X;Y)$ is the reduction in uncertainty in X after knowing Y and $H(X \mid Y)$ is uncertainty remained in X after knowing Y we can say, $H(X \mid Y) + I(X;Y) = H(X)$.

Using equation (iv) and the last property given above, we can write,

$$I(X;Y) = H(X) - H(X \mid Y)$$
$$= -\sum_{x,y} P(X = x, Y = y) \cdot log_2 P(X = x) + \sum_{x,y} P(X = x, Y = y) \cdot log_2 P(X = x \mid Y = y)$$

hence,

$$I(X;Y) = \sum_{x,y} P(X = x, Y = y) \cdot log_2 \frac{P(X = x, Y = y)}{P(X = x) \cdot P(Y = y)}$$

or just,

$$I(x;y) = \sum_{x,y} P(x,y) \cdot \log_2 \frac{P(x,y)}{P(x) \cdot P(y)}$$

Clearly, from the formula above we can see that,

- Exchanging x and y doesn't change the equation of $I(x;y)$.
- If the two random variable are independent then $P(x,y) = P(x) \cdot P(y)$, hence it will form 1 in log making the final value equal to 0.

3.5 Cross-entropy

Imagine you have given a die to roll for sixty times, and say based on your previous observations or "**belief**", you are expecting each number to appear for about ten times, but in "**reality**" when you start rolling that die you realized in total of hundred rolls you only get 4 and 6 every time with equal number of times (50-50). We can see there is a significant difference in the distribution of your belief and reality, so the average surprise that you get by observing the random variable governed by some distribution **P**, while believing in its model **Q** is defined as **Cross-entropy** $H(P, Q)$.

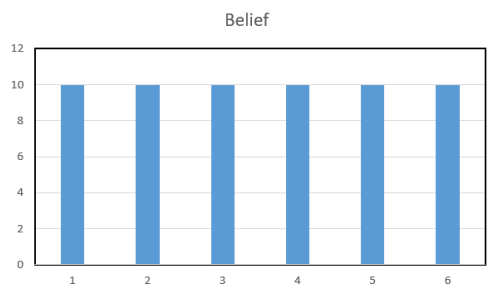

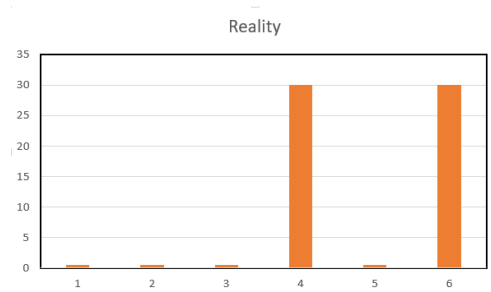

Definition — Cross-entropy

Cross-entropy is defined as the expected value of the logarithm of the probability of the true distribution, given an estimated distribution. Mathematically, if P is the true distribution and Q is the estimated distribution, then the cross entropy is given by,

$$H(P, Q) = -\sum_{s}^{states} p_s \cdot \log_2(q_s)$$

In case of above example, $H(P, Q)$ turns out to be 2.585.

But what causes the difference in distribution?

1. Believing in the wrong model.
2. Inherent uncertainty of the process.

Key properties of Cross-entropy :

- Note that if P and Q are both exact same distribution (or model) then $H(P, Q) = H(P)$.
- Also, already believing in some distribution will only make you more **surprise** rather than not believing anything on the first place, i.e. $H(P, Q) \geq H(P)$.
- Cross-entropy is Asymmetric in nature, i.e. $H(P, Q) \neq H(Q, P)$.

The concept of cross-entropy is highly used in the concepts of machine learning like Neural networking, natural language processing, Reinforcement learning, Image recognition, Generative models, etc. Basically, in all areas where one has to create a distribution based on the realistic distribution. The lower the cross-entropy between the two, the better the model will behave like reality.

3.6 Encoding in information theory

Why do we need encoding?
Encoding refers to the process of converting a message or data into a binary or symbolic format that is efficient for storage or transmission. The main purposes of encoding are to compress data, preserve information (lossless compression), and transmit messages faster. This is generally get by making shorter codes to more frequent symbols (symbols with higher probability) and longer codes to less frequent ones (symbols with low probability), which reduces the average length per symbol L. This approach is known as entropy coding.

$$L = \sum_{s}^{symbol} P(s) \cdot len(s)$$

Note for any lossless encoding algorithm with random variable X with different symbols assigned to their probability, it can be **proven** then $L \geq H(X)$.
In this section, we are going to look at some of the encoding algorithms.

Prefix coding

In information theory, a **variable-length prefix code** is a type of code in which each symbol from a source alphabet is mapped to a unique binary string (codeword), **and no codeword is a prefix of any other**. Means in the tree representation of the encoding where every left branch of a node is consider to be 0 and every right branch is consider to be 1, **none of the node of tree is symbol from source alphabet**. This property ensures that the encoded message can be uniquely decoded without ambiguity. For example given **Figure 2** is an example of prefix coding and **Figure 3** is not because it uses a source symbol as a node.

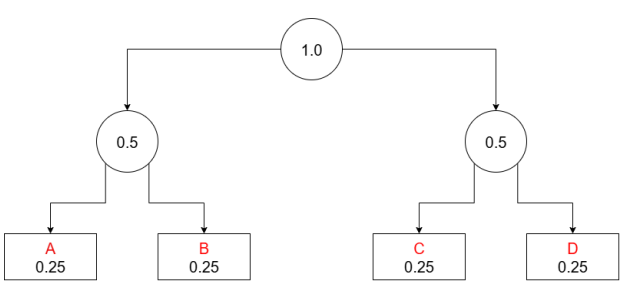

Figure 2: Prefix encoding

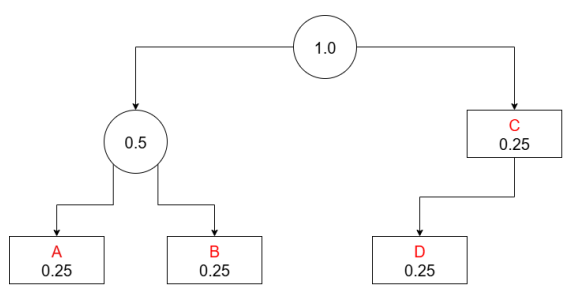

Figure 3: Not Prefix encoding

Shannon–Fano Encoding

Shannon–Fano encoding is an early method of variable-length prefix coding. It was developed to minimize the average length of encoding based on the probability distribution of source symbols. The basic algorithm involves the following steps:

- Symbols are arranged in ascending order of probability.
- The list is divided into two parts with approximately equal total probabilities.
- A "0" is assigned to the symbols in one half and "1" to the other half.
- The process is recursively applied to each half.

For example: Consider the following symbols and probabilities:

Symbol	Probability
A	0.17
B	0.35
C	0.17
D	0.15
E	0.16

Using Shannon–Fano encoding, we might obtain:

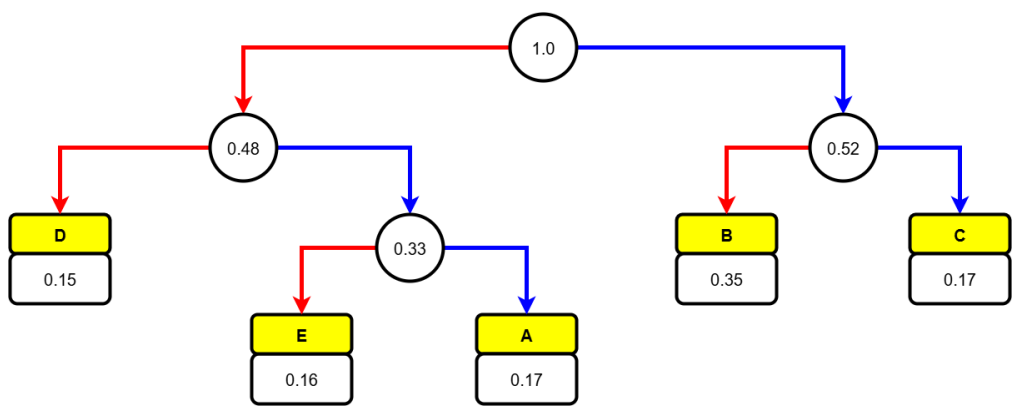

Figure 4: Shannon-Fano Encoding tree

Symbol	Code
A	011
B	10
C	11
D	00
E	010

Average lenght per symbol L, $L = 2.33$. Note that this encoding is not guaranteed to be optimal.

Huffman Encoding

Huffman encoding is a greedy algorithm that constructs an optimal prefix code based on the symbol probabilities. It always produces the **minimum average codeword length**, making it an optimal solution in terms of expected code length. This algorithm involves the following steps:

- Arrange all symbols in ascending order based on their probability.
- Take the first two symbols and make it the lowest root of the tree, create their node with one branch "0" and another "1" and assign it a value which is the sum of their probability.
- In the original list of source symbols, replace these two symbols with the new node.
- Apply this process recursively to all the elements.

For example: Using the same set of symbols and probabilities as above:

Symbol	Probability
A	0.17
B	0.35
C	0.17
D	0.15
E	0.16

A possible Huffman encoding is:

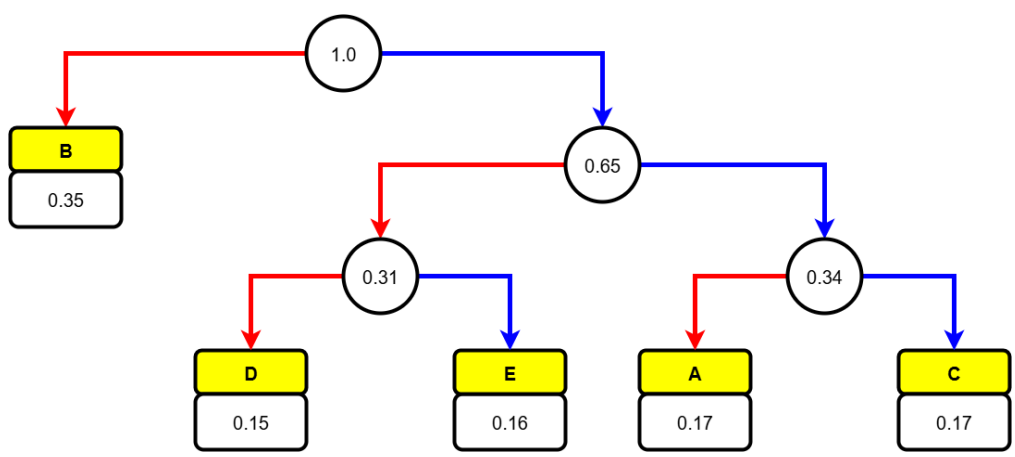

Figure 5: Huffman Encoding tree

Symbol	Code
A	110
B	0
C	111
D	100
E	101

Average length per symbol L, $L = 2.30$. Note exact code for the symbol may vary, but the average length will remain the same.

Comparison: Huffman vs Shannon–Fano

Feature	Shannon–Fano	Huffman
Method	Top-down partitioning	Bottom-up greedy tree
Optimality	Not always optimal	Always optimal
Efficiency	Lower	Higher
Complexity	Simpler	Slightly more complex
Code Length	May exceed entropy	Closest to entropy

Huffman encoding outperforms Shannon-Fano in terms of compression efficiency and is more widely used in practical applications such as file compression and multimedia encoding (e.g., ZIP files, JPEG compression).
There are many more lossless compression algorithms like **Arithmetic coding** which maps data to a range (a, b) where $0 \leq a < b < 1$, **Burrows-Wheeler Transformation** which rearranges the characters of a string to group similar characters together, making the transformed string more suitable for compression, **Lempel-Ziv (LZ77)** which has one aim, i.e. to look for duplicate data and use a much more compact data representation for it, and many more.

4 Conclusion

This report has provided a mathematical and detailed overview of the foundation concepts of information theory, which were developed over the definitions and concepts of probability theory and its application in quantifying and managing information. The report dives into the principles of information theory, particularly through Claude Shannon's work on entropy, joint entropy, and mutual information. The sections on encoding data cover Shannon-Fano encoding and Huffman encoding with a very brief overview of other encodings. These encoding processes are critical in areas of machine learning, telecommunication, etc. The work in information has a huge impact on developing the field of computer science, from neural networking to multimedia compression. As we move along in time in this data-driven world, the concepts of information theory will be important in inventing and shaping innovative solutions to complex problems.

References

[1] R.B. Ash. *Basic Probability Theory.* Dover Publications, INC., 2008.

[2] M. Mitzenmacher and E. Upfal. *Probability and Computing: Randomized Algorithms and Probabilistic Analysis.* Cambridge, 2005.

[3] nptel. Electrical - probability foundation for electrical engineers. `https://youtube.com/playlist?list=PLbMVogVj5nJQqGHrpAloTec_lOKsG-foc&si=m--Q24XuvAijpOGm`, 2014-15.

[4] Claude E Shannon. A mathematical theory of communication. *The Bell system technical journal*, 27(3):379–423, 1948.